CONDUIT OUTLET BODIES (ROUND BOX), ERB SERIES EXPLOSION PROOF

BGM ®
BELGIUM
A QUALITY PRODUCT

APPLICATION

The ERB rectangular boxes are designed for use in the conduit system in hazardous areas,\ Zone 1 and 2

: provide opening for taps, splices or pull outlet for conductors.

: provide an access to conduit system for maintenance.

: change conduit direction

: use with theaded rigid steel conduit (RSC) or intermediate metal conduit (IMC)

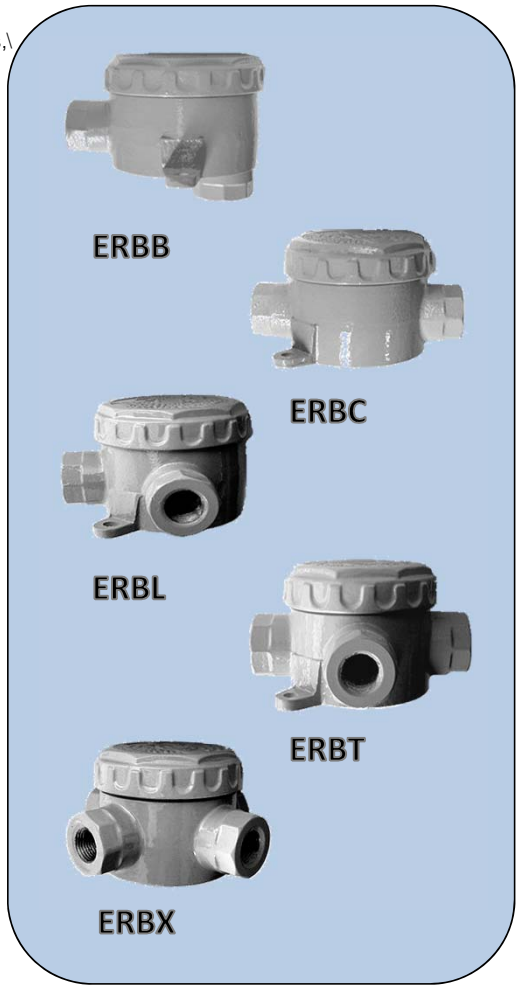

TECHNICAL DATA

Explosion protection	: Ex II 2 G Ex d IIB
Compliance with	: IEC 60079-0/ 1 , EN61241-0/ 1
Degree of protection	: IP45 acc to EN 60529 / IEC 60529
Ambient Temp. (Ta)	: -20° C to + 55° C T5, T6
Entries thread	: NPT (optional ISO thread)
Protection class for UL	: Class I, Divition1 or 2 Group.B,C,D
	: Class II, Divition 1 or 2 Groups.E,F,G

SPECIFICATION

Body material	: Marine grade copper-free aluminium alloy with polyester powder coated RAL 7032 (grey)
Sealing gasket	: NEOPRENE (CR) -25 C to + 100 C
Lid screws	: Stainless steel

OPTION

: IP 66 (with sealing gasket)

CATALOGUE NUMBER AND DIMENSION

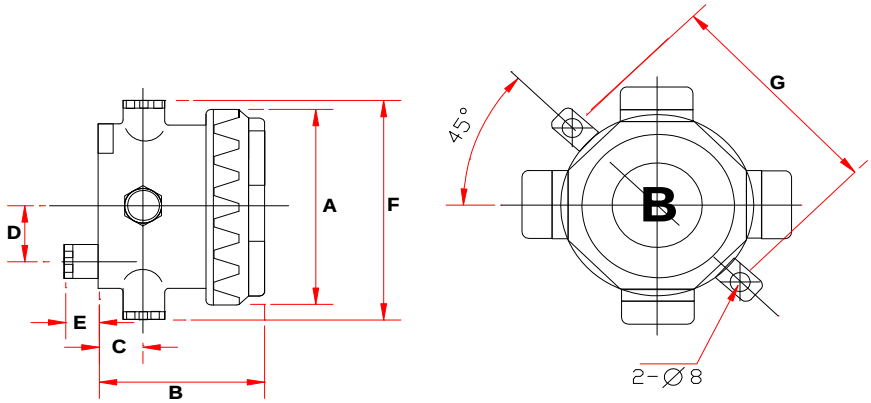

Hub Size. NPT (inch)	Cat.,No.	Dimension in mm. A	B	C	D✧	E✧	F	G
1/2"	ERBB 1 ERBC 1 ERBL 1 ERBT 1 ERBX 1	95	80	19	17	23	133	111
3/4"	ERBB 2 ERBC 2 ERBL 2 ERBT 2 ERBX 2	95	80	19	17	23	133	111
1"	ERBB 3 ERBC 3 ERBL 3 ERBT 3 ERBX 3	95	80	19	17	23	133	111
1.1/4"	ERBB 4 ERBC 4 ERBL 4 ERBT 4 ERBX 4	136	115	37	35	28	170	151
1.1/2"	ERBB 5 ERBC 4 ERBL 5 ERBT 5 ERBX 5	136	115	37	35	28	170	151
2"	ERBB 6 ERBC 6 ERBL 6 ERBT6 ERBX 6	136	115	37	35	28	170	151

✧ Dimension only for ERBB type